PORTUGAL

EN

MF2020

USER'S AND INSTALER'S MANUAL

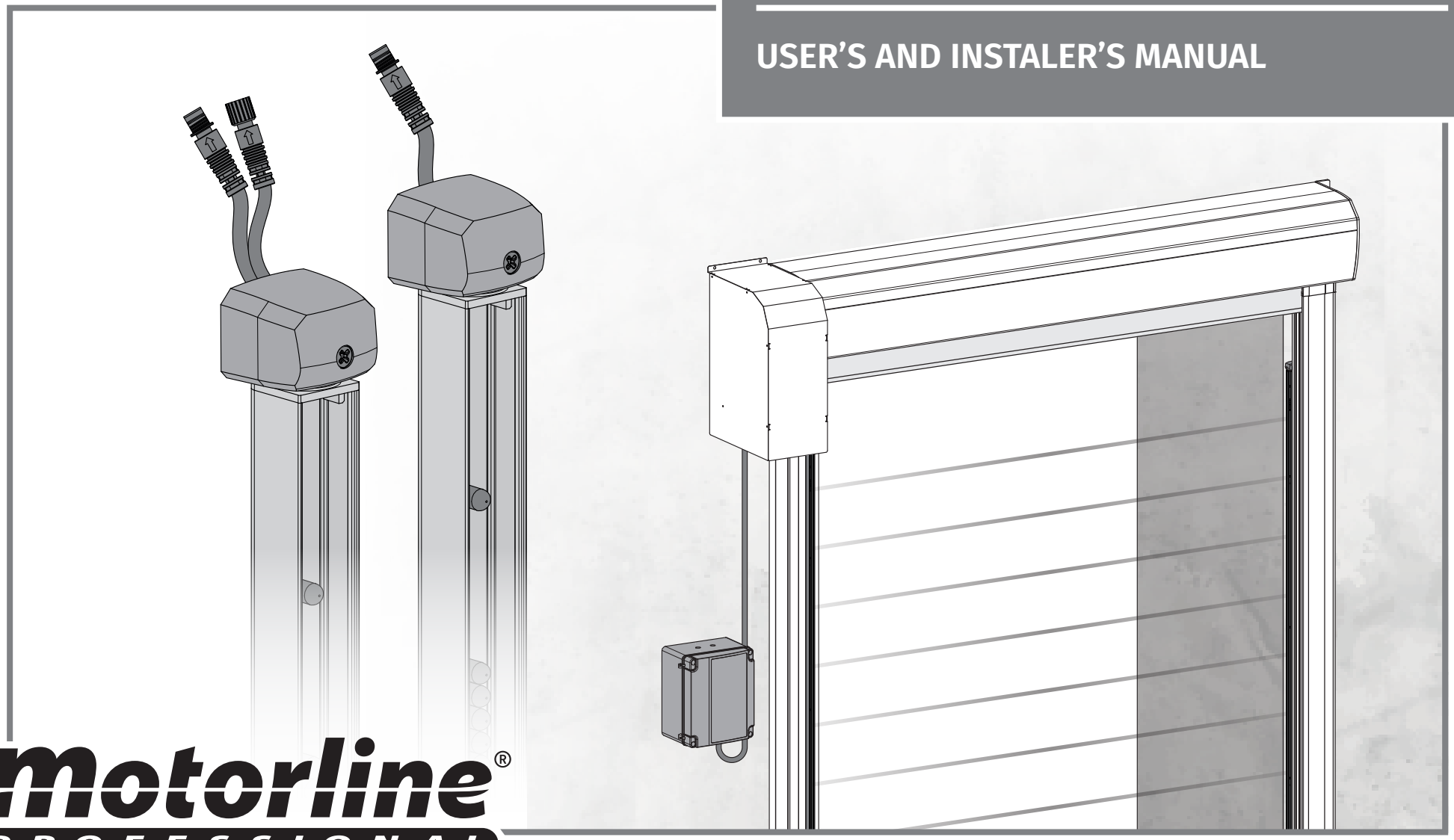

Motorline® PROFESSIONAL

V2.0 REV. 03/2022

Compatible hardware versions:
V0.1.0 | V0.2.0

00. CONTENT

INDEX

01. SAFETY INSTRUCTIONS 1B

02. THE PRODUCT
- MF2020 4A
- TECHNICAL CHARACTERISTICS 4A
- NUMBER OF SENSORS 4B
- IDENTIFICATION OF PARTS 4B
- DIMENSIONS AND DESCRIPTION 5A

03. INSTALLATION
- CARE DURING INSTALLATION 5B
- INSTALLATION 6

04. CONNECTIONS
- CONNECTION SCHEME 8A

05. OPERATION
- OPERATING MODE 8B
- CHANGE OPERATING MODE 8B
- RELAY OUTPUT 9A
- TEST INPUT 9A
- TIME DIAGRAM 9A
- LED SIGNALING 9B

06. TROUBLESHOOTING
- INSTRUCTIONS FOR CONSUMERS AND SPECIALIZED TECHNICIANS 10A

01. SAFETY INSTRUCTIONS

ATTENTION:

CE	This product is certified in accordance with European Community (EC) safety standards.
RoHS	This product complies with Directive 2011/65/EU of the European Parliament and of the Council, of 8 June 2011, on the restriction of the use of certain hazardous substances in electrical and electronic equipment and with Delegated Directive (EU) 2015/863 from Commission.
	(Applicable in countries with recycling systems). This marking on the product or literature indicates that the product and electronic accessories (eg. Charger, USB cable, electronic material, controls, etc.) should not be disposed of as other household waste at the end of its useful life. To avoid possible harm to the environment or human health resulting from the uncontrolled disposal of waste, separate these items from other types of waste and recycle them responsibly to promote the sustainable reuse of material resources. Home users should contact the dealer where they purchased this product or the National Environment Agency for details on where and how they can take these items for environmentally safe recycling. Business users should contact their vendor and check the terms and conditions of the purchase agreement. This product and its electronic accessories should not be mixed with other commercial waste.
	This marking indicates that the product and electronic accessories (eg. charger, USB cable, electronic material, controls, etc.) are susceptible to electric shock by direct or indirect contact with electricity. Be cautious when handling the product and observe all safety procedures in this manual.

01. SAFETY INSTRUCTIONS

GENERAL WARNINGS

- This manual contains very important safety and usage information. very important. Read all instructions carefully before beginning the installation/usage procedures and keep this manual in a safe place that it can be consulted whenever necessary.
- This product is intended for use only as described in this manual. Any other enforcement or operation that is not mentioned is expressly prohibited, as it may damage the product and put people at risk causing serious injuries.
- This manual is intended firstly for specialized technicians, and does not invalidate the user's responsibility to read the "User Norms" section in order to ensure the correct functioning of the product.
- The installation and repair of this product may be done by qualified and specialized technicians, to assure every procedure are carried out in accordance with applicable rules and norms. Nonprofessional and inexperienced users are expressly prohibited of taking any action, unless explicitly requested by specialized technicians to do so.
- Installations must be frequently inspected for unbalance and the wear signals of the cables, springs, hinges, wheels, supports and other mechanical assembly parts.
- Do not use the product if it is necessary repair or adjustment is required.
- When performing maintenance, cleaning and replacement of parts, the product must be disconnected from power supply. Also including any operation that requires opening the product cover.
- The use, cleaning and maintenance of this product may be carried out by any persons aged eight years old and over and persons whose physical, sensorial or mental capacities are lower, or by persons without any knowledge of the product, provided that these are supervision and instructions given by persons with experienced in terms of usage of the product in a safe manner and who understands the risks and dangers involved.
- Children shouldn't play with the product or opening devices to avoid the motorized door or gate from being triggered involuntarily.

WARNINGS FOR TECHNICIANS

- Before beginning the installation procedures, make sure that you have all the devices and materials necessary to complete the installation of the product.
- You should note your Protection Index (IP) and operating temperature to ensure that is suitable for the installation site.
- Provide the manual of the product to the user and let them know how to handle it in an emergency.
- If the automatism is installed on a gate with a pedestrian door, a door locking mechanism must be installed while the gate is in motion.
- Do not install the product "upside down" or supported by elements do not support its weight. If necessary, add brackets at strategic points to ensure the safety of the automatism.
- Do not install the product in explosive site.
- Safety devices must protect the possible crushing, cutting, transport and danger areas of the motorized door or gate.
- Verify that the elements to be automated (gates, door, windows, blinds, etc.) are in perfect function, aligned and level. Also verify if the necessary mechanical stops are in the appropriate places.
- The central must be installed on a safe place of any fluid (rain, moisture, etc.), dust and pests.
- You must route the various electrical cables through protective tubes, to protect them against mechanical exertions, essentially on the power supply cable. Please note that all the cables must enter the central from the bottom.
- If the automatism is to be installed at a height of more than 2,5m from the ground or other level of access, the minimum safety and health requirements for the use of work equipment workers at the

work of Directive 2009/104/CE of European Parliament and of the Council of 16 September 2009.

- Attach the permanent label for the manual release as close as possible to the release mechanism.
- Disconnect means, such as a switch or circuit breaker on the electrical panel, must be provided on the product's fixed power supply leads in accordance with the installation rules.
- If the product to be installed requires power supply of 230Vac or 110Vac, ensure that connection is to an electrical panel with ground connection.
- The product is only powered by low voltage satefy with central (only at 24V motors)

WARNINGS FOR USERS

- Keep this manual in a safe place to be consulted whenever necessary.
- If the product has contact with fluids without being prepared, it must immediately disconnect from the power supply to avoid short circuits, and consult a specialized technician.
- Ensure that technician has provided you the product manual and informed you how to handle the product in an emergency.
- If the system requires any repair or modification, unlock the automatism, turn off the power and do not use it until all safety conditions have been met.
- In the event of tripping of circuits breakers of fuse failure, locate the malfunction and solve it before resetting the circuit breaker or replacing the fuse. If the malfunction is not repairable by consult this manual, contact a technician.
- Keep the operation area of the motorized gate free while the gate in in motion, and do not create strength to the gate movement.

Do not perform any operation on mechanical elements or hinges if the product is in motion.

RESPONSABILITY

- Supplier disclaims any liability if:
  - Product failure or deformation result from improper installation use or maintenance!
  - Safety norms are not followed in the installation, use and maintenance of the product.
  - Instructions in this manual are not followed.
  - Damaged is caused by unauthorized modifications
  - In these cases, the warranty is voided.

MOTORLINE ELECTROCELOS SA.
Travessa do Sobreiro, nº29
4755-474 Rio Côvo (Santa Eugénia)
Barcelos, Portugal

SYMBOLS LEGEND:

- Important safety notices
- Useful information
- Programming information
- Potentiometer information
- Connectors information
- Buttons information

02. THE PRODUCT

MF2020

The **MF2020** is a column photocell developed to safeguard all types of industrial doors (sectional and high-speed doors) up to a maximum width of 10 meters.
The emitter and receiver create an infrared beam grid offering protection up to 2.5 meters high.
When the infrared beams are interrupted, a signal is sent to the control board. Once the detention area is clear, a new signal is sent to the control board to indicate that the area is clear.
The photocell has three operating modes:
Static, **Sequential** and **Sequential for transparent tarpaulins.**

TECHNICAL CHARACTERISTICS

GENERAL	
• Power supply	12-24 Vdc
• Consumption (29 elements at 24Vdc)	100 mA
• Protection degree	IP67
• Working temperature	-20°C to 60°C
• Operating mode	Sequential | Static | Sequential for transparent tarpaulins
• Output	Relay (NC)
• Output load	1A (30 Vdc) | 0,3A (125 Vac)
• Maximum response time	70 ms
• Supervision timer	265 ms
• Operating distance	1 a 10 m
• Number of elements	17 | 21 | 25 | 29
• Maximum protection height	2505 mm
• Material	Lacquered aluminum

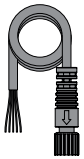

CONNECTION CABLE TO THE CONTROL BOARD	
• Length	3 m
• Connection	Screw-on (M8) | 5 pins
• Diameter	∅4,2 mm
• Wires	AWG28
• Material	Polyurethane (PUR)
• Protection degree	IP67

02. THE PRODUCT

TECHNICAL CHARACTERISTICS

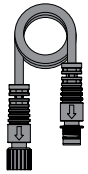

SYNC CABLE	
• Length	10 m
• Connection	Screw-on (M8) | 4 pins
• Diameter	∅3,5 mm
• Material	Polyurethane (PUR) with shielding
• Protection degree	IP67

NUMBER OF SENSORS

Depending on the maximum length chosen for the MF2020, the protection distance and number of sensors in each column of photocells vary:

Length	Protection height	Number of sensors
1425 mm	1305 mm	17
1825 mm	1705 mm	21
2225 mm	2105 mm	25
2625 mm	2505 mm	29

IDENTIFICATION OF PARTS

To facilitate the identification of the parts in the installation diagram, each part of the photocell columns is identified with a letter:

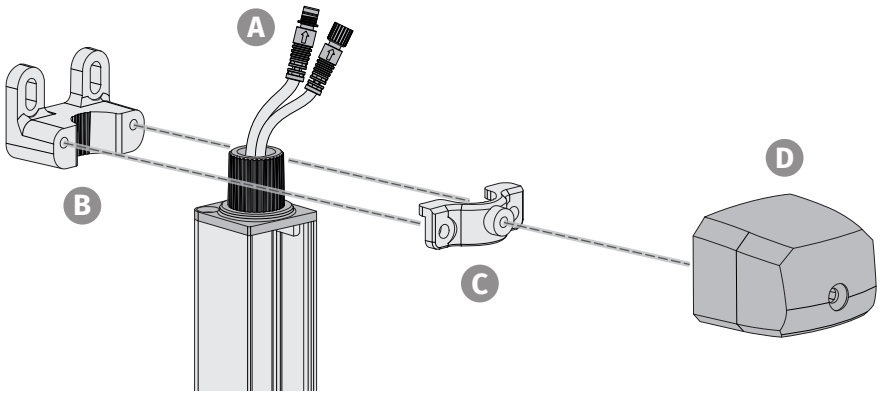

02. THE PRODUCT

DIMENSIONS AND DESCRIPTION

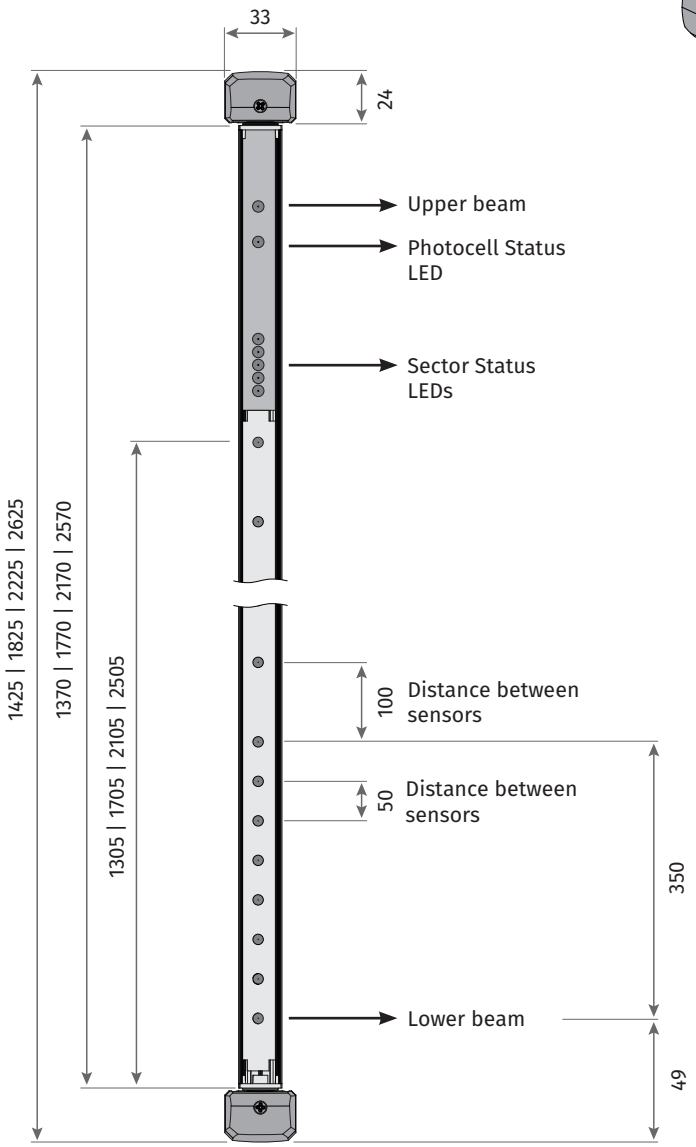

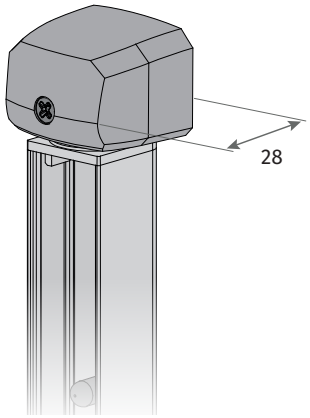

Dimensions in mm

03. INSTALLATION

CARE DURING INSTALLATION

For the correct functioning of the photocells, it is necessary to pay attention to some aspects during the installation process.

• COLUMN ALIGNMENT

Make sure that the lower edge of the photocell columns is aligned with the level of the door in the closed position.

• AVOID SUN EXPOSURE

You should avoid exposing the photocells (especially the photocell receiver) directly to sunlight.
Other types of devices that emit infrared light such as photocells and other light curtains should also be avoided.
Also avoid areas with a reflective surface.

• PHOTOCELLS ORIENTATION

Make sure the columns are installed with the cable ends facing up.

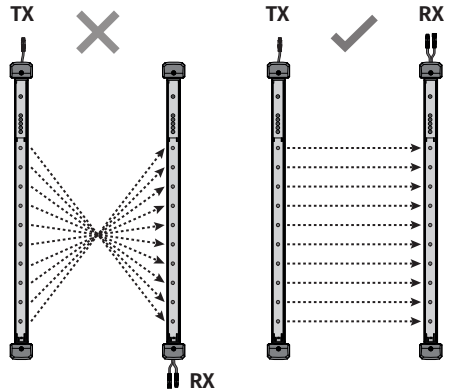

INSTALLATION

Before starting the installation, turn off the main power supply to the door control board and make sure that this system is completely deactivated.

• ASSEMBLY OF PHOTOCELL COLUMNS

1 Remove covers (D) from columns (A) by loosening the screws on each cover.

2 Place the photocell receiver (RX) in the place to be fixed, mark the 4 necessary holes, drill and tighten.
The output of the cables must always face upwards.

3 Repeat with the other photocell (TX), ensuring both columns are at the same height (aligned horizontally).

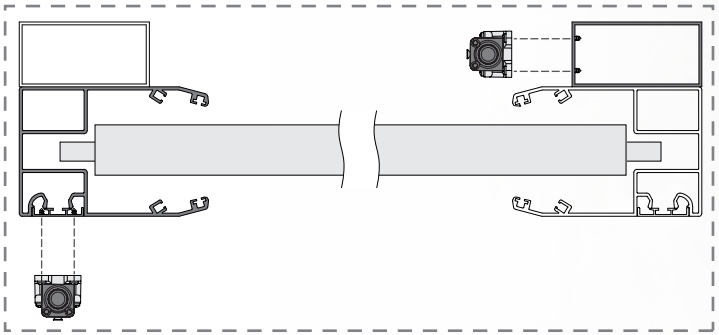

SEQUENTIAL MODE

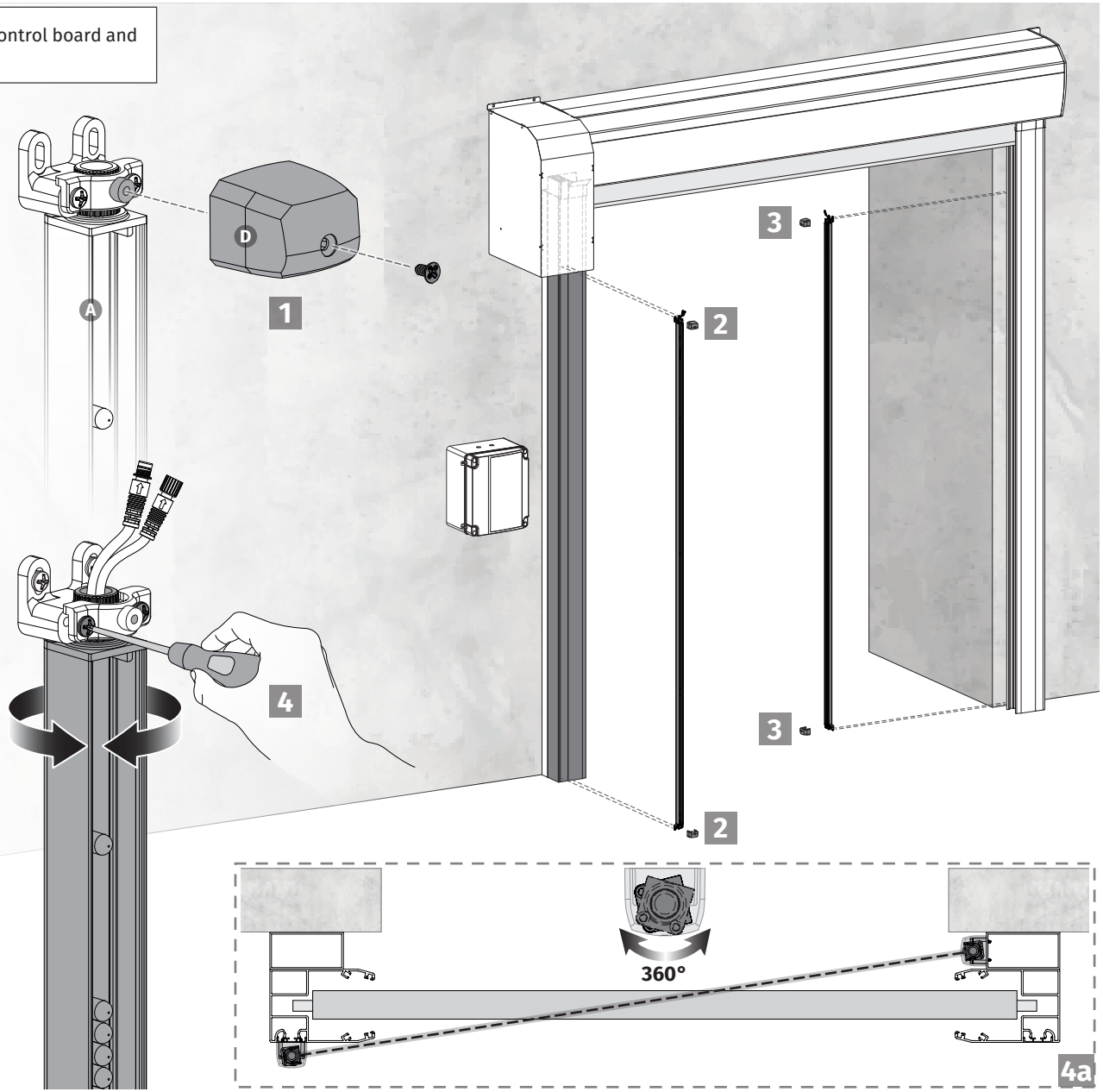

• ALIGN THE PHOTOCELL BEAMS

4 Adjust the orientation of each column so that they are aligned between them:
- Slightly loosen the clamp screws (**C**);
- Rotate the columns until they are perfectly aligned (Detail **4a**);
- Retighten the clamp screws (**C**) to lock this position.

INSTALLATION

• MAKE THE CONNECTIONS

5 Pass the photocell cables through holes centered with the supports (**B**) of each column, in order to make the connections between them and with the control board.
This way, they will be hidden by the covers (D).

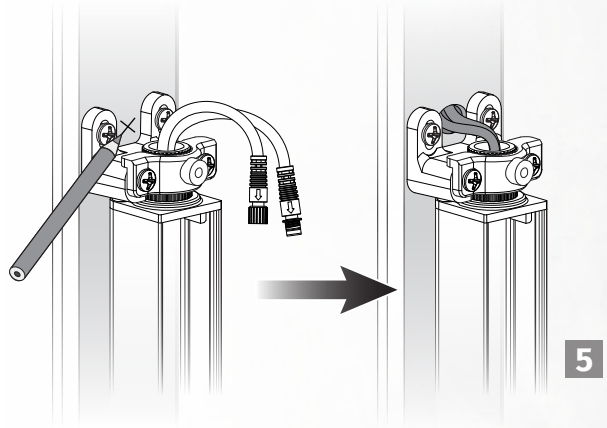

6 Make the cable connections in the following order:
Connection a: TX Photocell (emitter) with Synchronization Cable;
Connection b: Synchronization Cable with RX Photocell (receiver);
Connection c: RX Photocell (receiver) with Connection Cable;
Connection d: Connection Cable with Control Board (see page 8A);

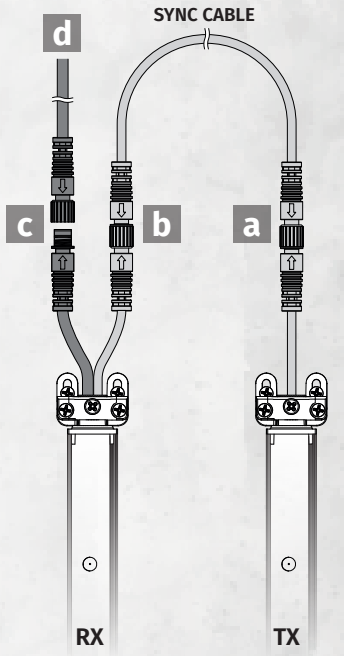

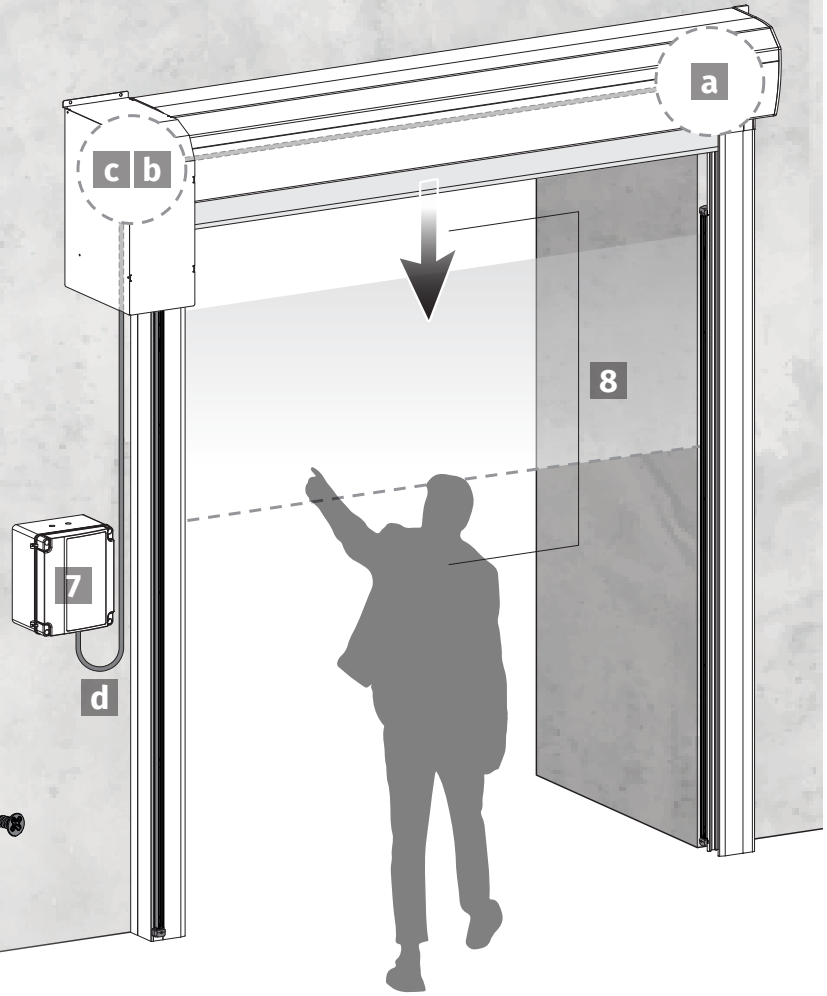

• TEST SYSTEM OPERATION

7 Power the door control board and check the photocell Signaling Leds (see page 9B).

8 Test the functioning of the system by carrying out an opening/closing maneuver, verifying that the photocells do not interfere with the normal movement of the door.
Then repeat the maneuver and place yourself in the area protected by the photocells and check if it reverses the direction of maneuver.

9 Replace the covers (**D**) on the supports (**B**) and fasten with the screws.

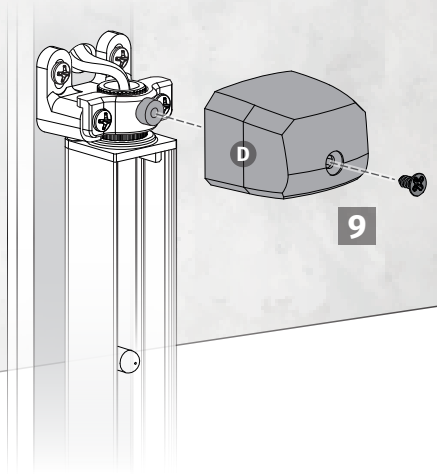

04. CONNECTIONS

CONNECTION SCHEME

COLOR	COLOR
• Power supply	Red
• GND (0V)	Black
• Relay output (NC)	Green
• Relay output (COM)	Yellow
• Test input	Blue

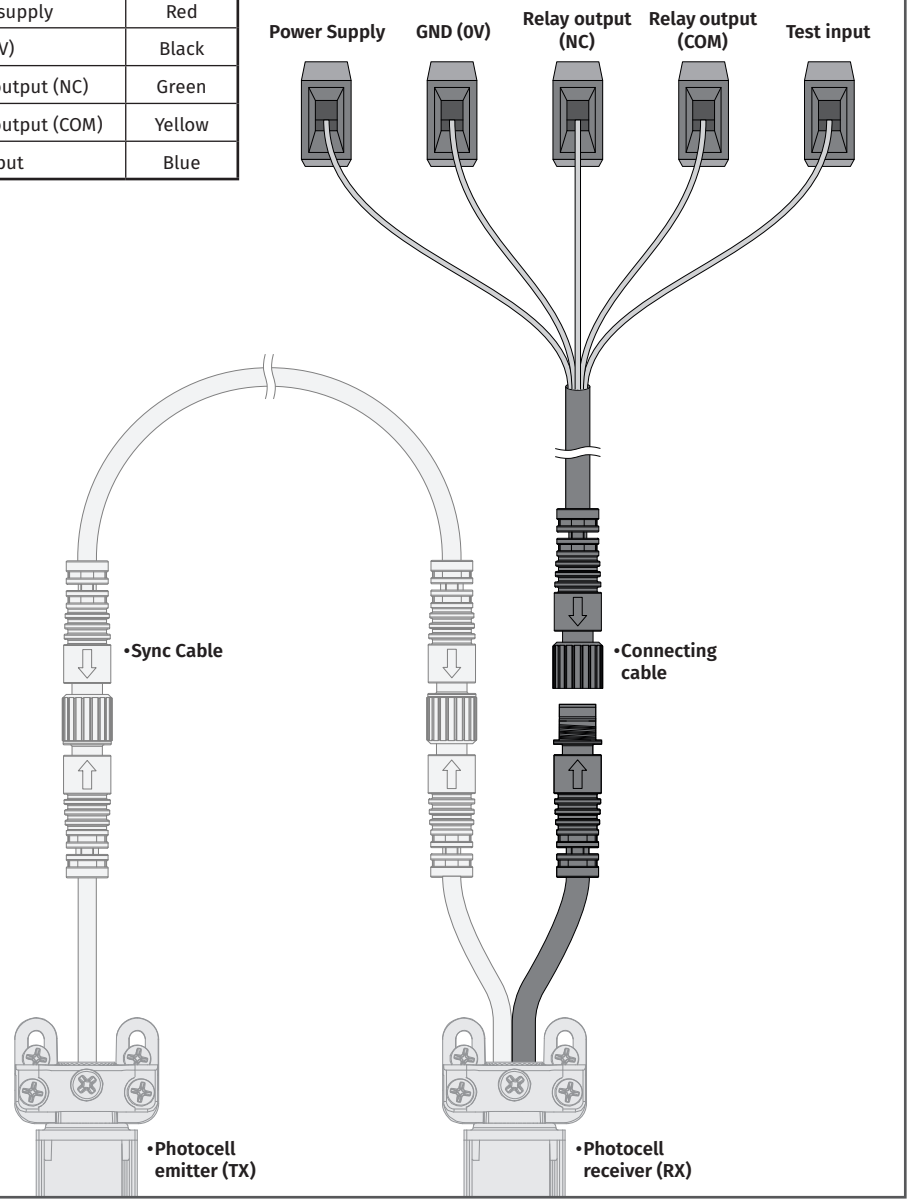

05. OPERATION

OPERATING MODE

Photocells can operate in three different modes:

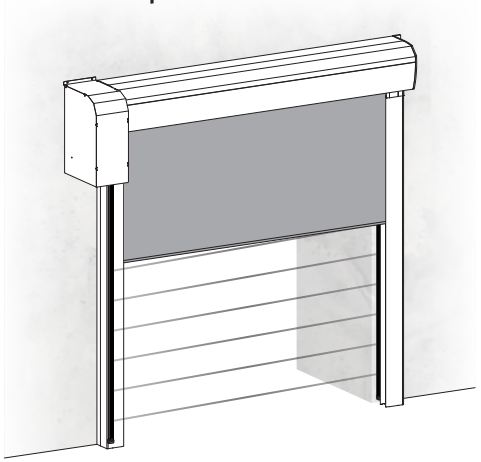

• SEQUENTIAL MODE
The photocell is able to differentiate between an interruption caused by an object and the movement of the door.
For this mode to work correctly, the door must be opaque.

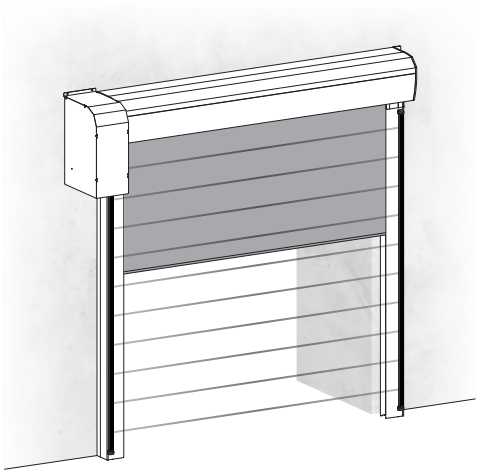

• STATIC MODE
In this mode, the photocell will reverse the maneuver when one of the sensors is interrupted.

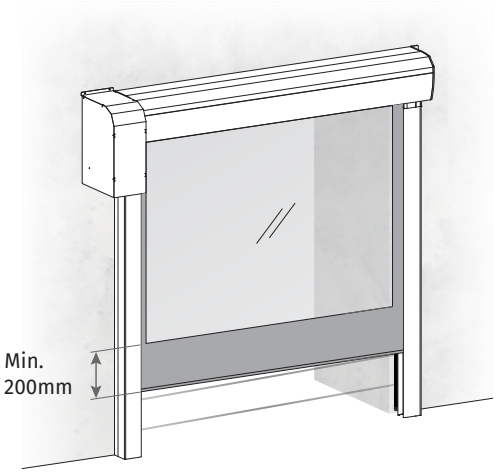

• SEQUENTIAL MODE FOR TRANSPARENT TARPAULINS
The photocell is able to differentiate between an interruption caused by an object and the movement of the door.
For this mode to work properly, the bottom of the tarpaulin must be opaque by at least 200mm.

CHANGE OPERATING MODE

To detect the current Operating Mode of the photocell, you must observe the behavior of the RX Photocell Status LED:

Mode	Status LED (RX Photocell)
SEQUENTIAL	Blinks 1 time every 2 seconds
STATIC	Always on
SEQUENTIAL FOR TRANSPARENT TARPAULINS	Blinks 2 times every 2 seconds

By default the photocells are in **SEQUENTIAL** Mode.

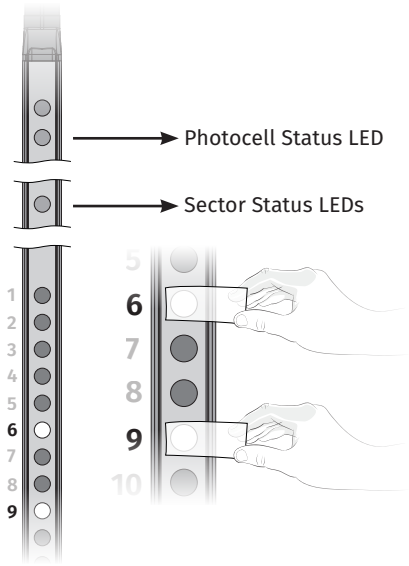

To select the next Operating Mode, follow these steps:

01 • Turn off the power supply photocells;
02 • On the photocell receiver (RX) cover sensors **6** and **9** from the top and keep the others clear;
03 • Reconnect the photocells to the power supply. ***The photocell will operate in the next Operating Mode.***
04 • Uncover sensors **6** and **9** again.

Whenever you carry out the steps to change the Operating Mode, the photocell assumes the mode immediately following the mode that is active by the following order:
• **SEQUENTIAL ➡ STATIC ➡ SEQUENTIAL FOR TRANSPARENT TARPAULINS ➡ SEQUENTIAL ➡**

RELAY OUTPUT

When an object enters the area protected by the light curtain the output switches to open contact (NO) after the response time.
When the object leaves the area, the output returns to closed contact (NC).

TEST INPUT

To check if the photocell is working correctly, this function allows the photocell to be self-tested through a pulse of at least 100ms to GND (0V) executed by the door control board.
If the photocell is working correctly, it will switch the relay output.

If you do not want to use this feature, you must connect the test cable to the power cable.

TIME DIAGRAM

This diagram allows, during a test, to verify the behavior of the photocell and its interaction on a time scale, showing the conditions that change during that period.

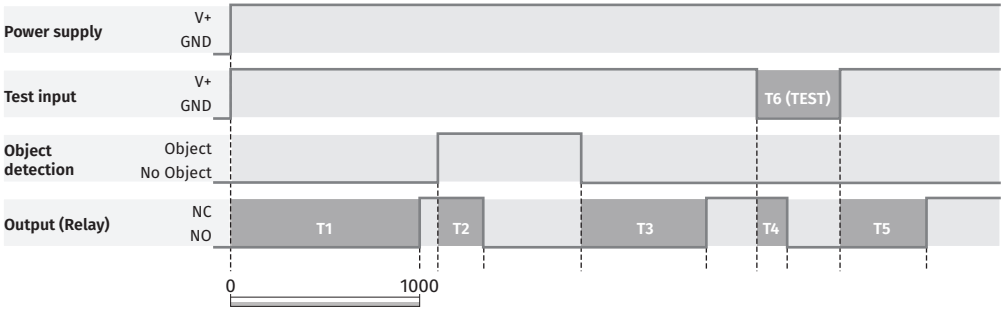

Value	Description	Time
T1	Startup time	1000 ms
T2	Response time	70 ms
T3	Recovery time	350 ms
T4	Test response time	30 ms
T5	Reboot time	100 ms
T6	Test time	100 ms (minimum)

05. OPERATION

LED SIGNALING

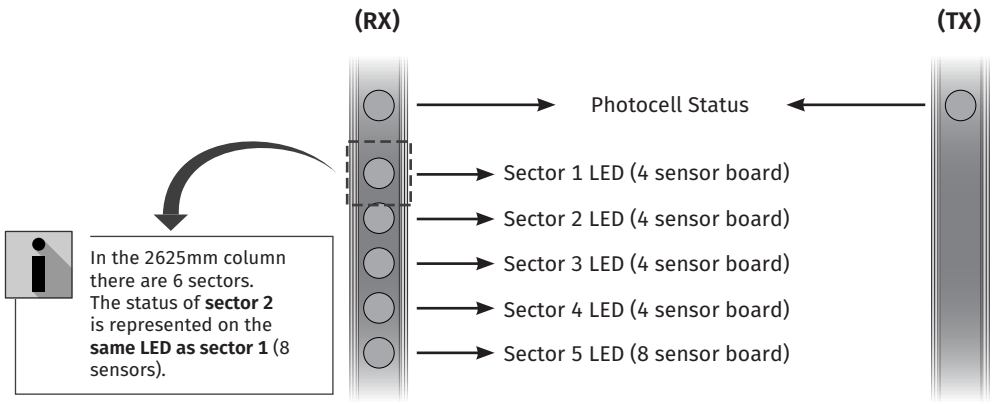

• **Photocell RECEIVER (RX)**

Green LED	Yellow LED	Photocell Status
●	○	The light curtain is functional
○	●	No communication between photocells
○	☼	Test input off
○	○	Without power
Green LED	**Red LED**	**Sector State**
●	○	Clear sector
○	●	Obstructed sector

• **Photocell EMITTER (TX)**

Green LED	Photocell Status
●	With power
○	Without power

● LED On ○ LED Off ☼ Blinking LED

06. TROUBLESHOOTING

INSTRUCTIONS FOR CONSUMERS AND SPECIALIZED TECHNICIANS

LED Status			Solution
Green TX LED	Green RX LED	Yellow RX LED	
○	○	○	• Check electrical connections; • Check if the power supplied to the control board is correct.
○	○	●	• Check the Sync Cable connection.
●	○	☼	• Make sure the test input cable is connected correctly; • If you are not using the test feature, connect this to the photocell supply (V+).
●	○	●	• Check the Sync Cable connection.

● LED On ○ LED Off ☼ Fast flashing LED